06/12/2024

19.2 IoT Alarm System

Mohammed Abdulwasa Mohammed Qasem

Contents

Introduction 1
Initial design 2
Improved design 3
Reviewing the system and design with others for improvements 4
Principles and Characteristics of the System 4
The standards used/operate in this project: 5
Potential security threats of the system could be: 6
Security protection methods: 7
Developing prototype of the system 8
Test log 12
Reviewing to which extent the prototype meets client requirements. 14
Justifying decisions made 15
Optimised prototype 16
Evaluating the final system 18
Legislations and regulations to consider. 19
Future improvements 20
Individual responsibility and time management 22
References 23

Introduction

As an IT Technician in Citizen Housing Group Limited. My manager has asked me to design and develop alarm systems that can detect any intruder and notify the homeowner and headquarters via email on pre-set email.

Initial design

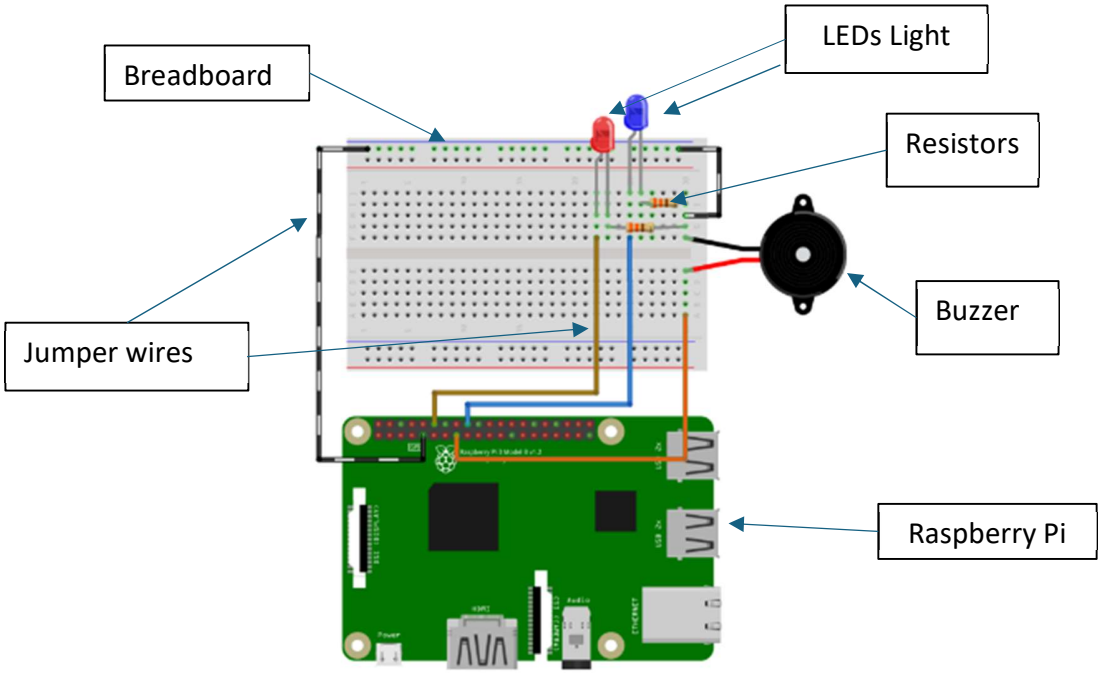

After sending and receiving feedback of the initial design, my colleagues suggested to add **Passive Infrared Sensor** which will help to detect any near movement of the system and by adding the **Buzzer and LEDs** this way the alarm system will be more effective as it will detect, light on the LEDs and provide loud sound when the system detects motions.

Here is the improved design:

Improved design

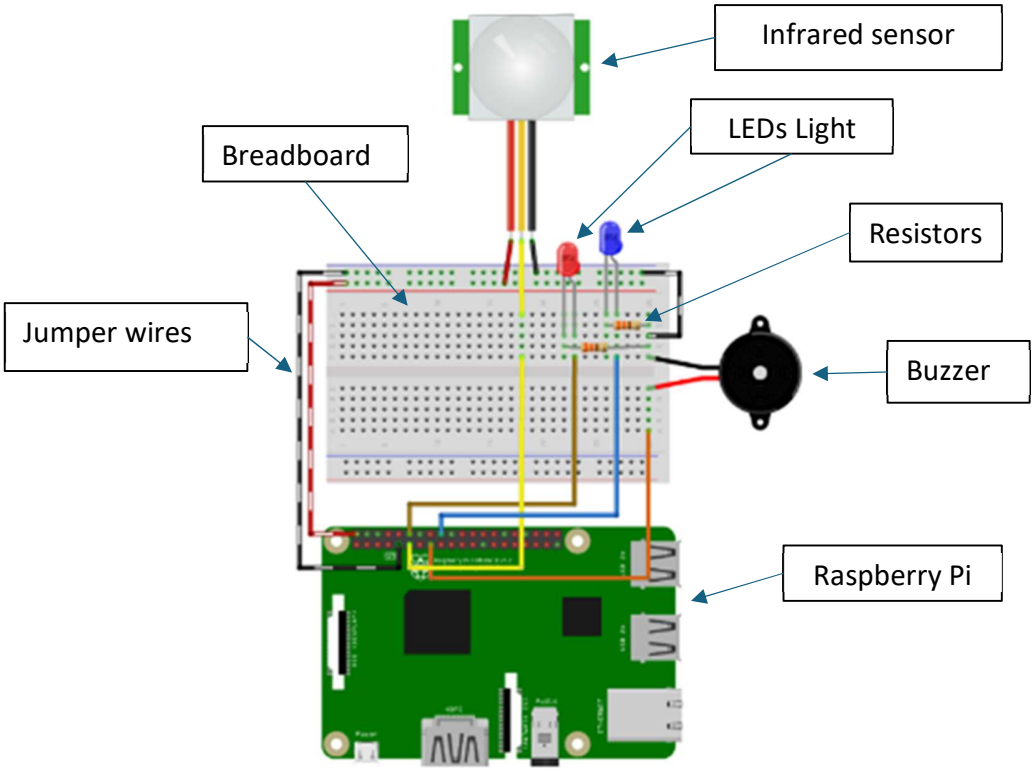

This pic shows the system architecture and equipment needed to build the alarm system.

- **Raspberry Pi** – Powerful/low-cost microcontroller and easier to connect sensors and network on it.
- **400 Point Breadboard** – Easy to modify and it is ideal for testing the different circuit setups.
- **Passive Infrared Sensor** – It detects movement of intruder, and it runs on low energy efficiency.
- **2 x 330 Ω resistors** – It helps to protect the LEDs and components from excessive current.
- **9 x M/F jumper wires** – It helps to connect components, and they are flexible.
- **1 x M/M jumper wires** – It helps to connect components, and they are flexible.
- **1 x Red LED** – Means Alert.
- **1 x Blue LED** – Means system status.
- **1 x Buzzer** – Provides loud sound when motion is detected.

Reviewing the system and design with others for improvements

My colleagues proposed the idea of incorporating passive infrared (PIR) sensors into the system to enhance its functionality by detecting nearby motions more effectively. This addition would improve the overall responsiveness and efficiency of the motion detection system. Furthermore, they recommended including detailed annotations for each component of the system. These annotations would serve as a guide, making it easier to understand the purpose and functionality of each feature within the system. By implementing these suggestions, the system would not only become more user-friendly but also achieve a higher level of accuracy and clarity in its design and operation.

1. What can be added to improve this design for alarm system

5 Responses

ID ↑	Name	Responses
1	Raees Khalifa	Incorporate a Passive Infrared Sensor to improve detection of nearby motion
2	Mohammed Daanyal	Enhance the system's motion detection by integrating a Passive Infrared Sensor for detecting nearby activity.
3	Kwaku-Bonsu Nyamekye	To better detect movement, it's recommended to add a Passive Infrared Sensor to the system.
4	Amaan Yakub	Consider adding a Passive Infrared Sensor to enhance the system's ability to sense movement in close proximity
5	Ilmunde Mohammed	Add annotations to make it clear for readers to understand each components on this design

Principles and Characteristics of the System

The principle and characteristics of the system include the **sensors** (wired/wireless), **actuators**, **communication protocols**, **device network** and **security**.

Sensors are devices that can detect the physical movements in the environment and convert it into signals that a system can interpret. for example, the passive infrared sensors (PIR) from the equipment can detect motion by sensing infrared radiation from objects. PIR are wired sensors since it connects physically to the Raspberry Pi.

Actuators perform actions based on signals from the system such as turning on the LEDs lights, sounding alarms or moving mechanical parts. For example, the red and blue LEDs are actuators that visually indicate system status or alarms. Similarly, the buzzer is also an actuator that provides an audio alert when motion is detected.

Communication protocol defines how devices within the system communicate with each other. These protocols are crucial in the IoT system for connecting sensors and actuators. For example, the GPIO pins of the raspberry Pi that I am using sends signals between the sensors (PIR) and actuators (LEDs, Buzzer). For external communication, the system can send SMTP to send alerts to the homeowners and headquarters when the alarm is triggered.

The **device network** connects all the components and enables data transfer between them and the central system. The network can be local (LAN) or global (internet-based). For example, the Raspberry Pi can connect to a local network (LAN) via Wi-Fi or Ethernet. This allows it to send real-time notifications such as email alerts, when the PIR sensors detect movement. Additionally, connecting to the internet enables remote monitoring making the system accessible from anywhere.

The standards used/operate in this project:

1. Once the infrared waves (PIR sensors) detect motion by sensing infrared radiation emitted by objects (e.g. Humans) it sends a digital signal to the Raspberry Pi via its GPIO pins.
2. The Raspberry Pi processes the signal and uses a network connection to send an email alert. The Wi-Fi (IEEE 802.11 Standards) being because it ensures reliable transmission of data packets needed for sending email alerts.
3. The Raspberry Pi uses TCP/IP with mail servers over the internet using the TCP/IP protocol which is essential for networking and uses SMTP to send emails via python scripts. The security feature is being used in this process is TLS and SSL to encrypt the data communication.
4. Once motion is detected and processed, the Raspberry Pi sends an automated email to notify the owner. A Python script formats the email using libraries like SMTPLIB and, the script connects to an email server (e.g. Gmail) using SMTP.

Network Flow Summary

- Infrared Detection: The PIR sensor detects motion and sends a signal to the Raspberry Pi.
- Data Processing: The Raspberry Pi processes the signal and prepares an email alert.
- **Network Transmission**: Via **Wi-Fi** (IEEE 802.11) the Raspberry Pi connects to the internet.
- **Email Sending**: Using **SMTP** over **TCP/IP**, the Raspberry Pi communicates with the mail server.

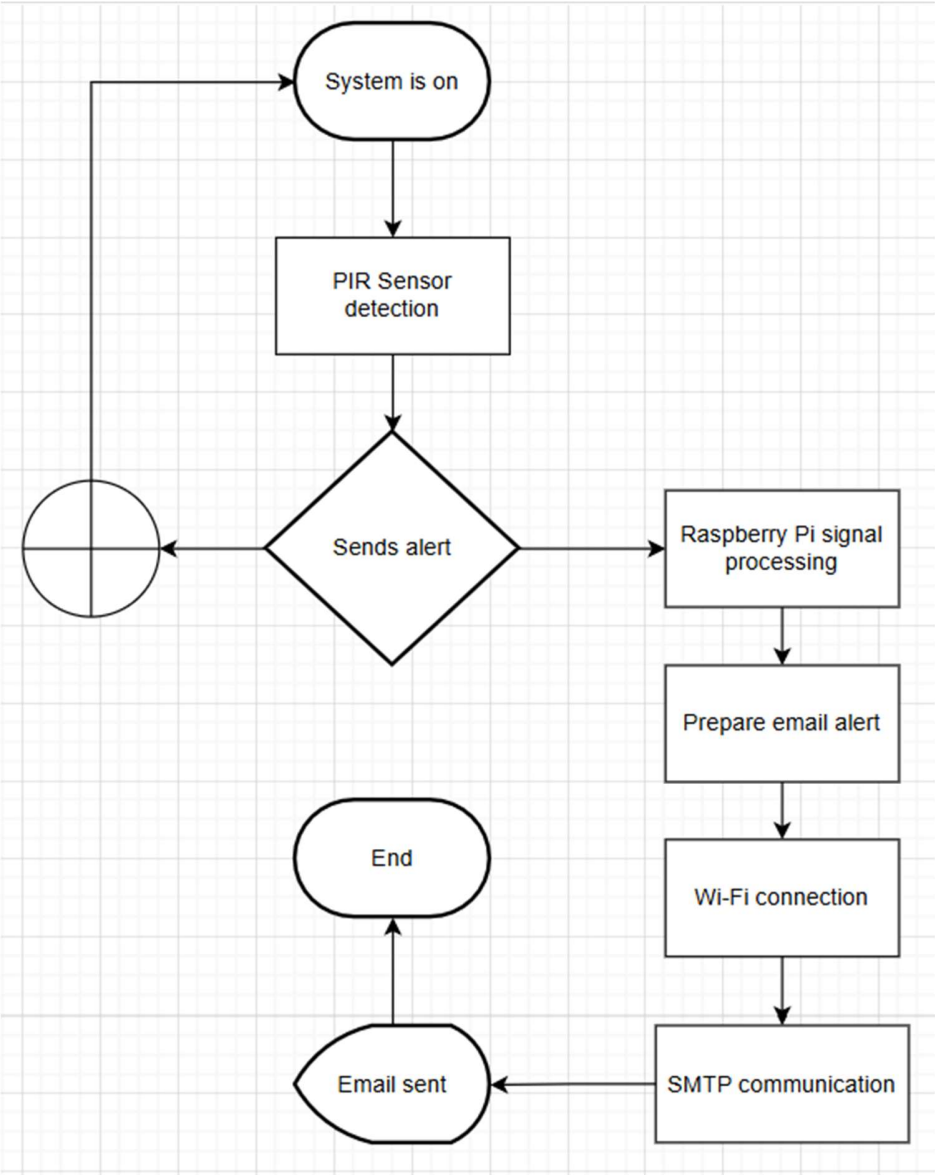

Potential security threats of the system could be:

unauthorised access from hackers which could gain access to the system through weak or default credentials on the Raspberry Pi.

Data interception could also be an issue as data transmission from sensors (like PIR) to the Raspberry Pi or the internet (email alerts) could be intercepted by attackers.

Physical involvement, the physical components such as PIR sensors, LEDs or the Raspberry Pi could be tampered with resulting in malfunction or false alerts.

Remote management of the system could be:

Raspberry Pi allows the system to be managed and monitored remotely over network to enable real-time updates and alerts. This is beneficial for homeowners or businesses as they can receive notifications when they are not on-site.

Remote access should be secured using authentication methods such as password or encryption (SSH or VPN) to prevent unauthorised access to the system.

Effects of attack of the system could be:

Denial of service (DoS) attackers could flood the system with traffic, rendering it unable to detect or respond to real intrusions.

An attack could trigger false sensors readings causing unnecessary alerts and reducing the credibility of the system.

Security protection methods:

To increase the security of the system it needs to be encrypted for all data transmissions including sending alerts such as secure emails protocols or encrypted sensors data helps to prevent interception and tampering.

Implementing strong authentication such as unique passwords for accessing the Raspberry Pi and using multi-factor authentication where possible.

Configuring network firewalls to restrict unauthorised access to Raspberry Pi and IoT devices. Additionally, regularly updating the Raspberry Pi software and firmware to patch vulnerabilities and improve security.

Lastly, physically ensuring that the components like Raspberry Pi and sensors are placed in secured locations to prevent tampering.

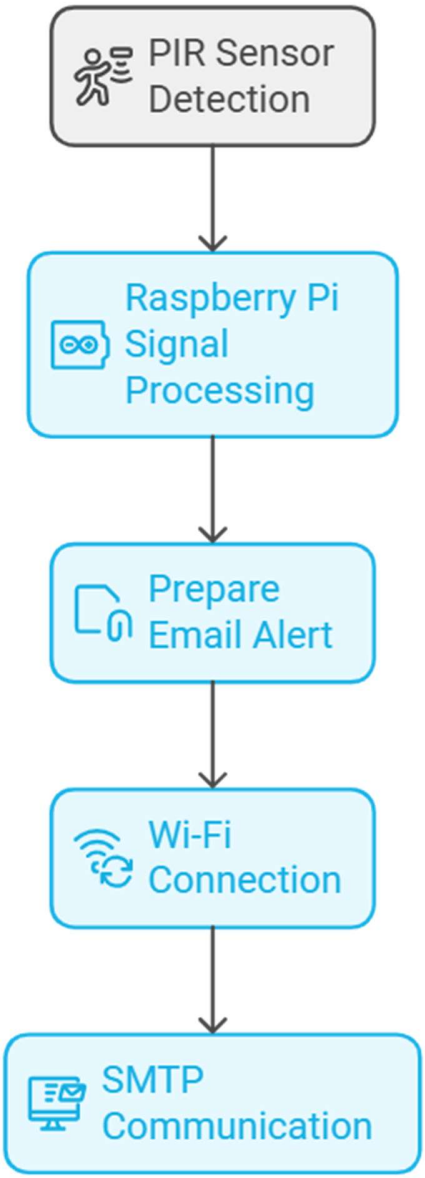

Developing prototype of the system

Prototype

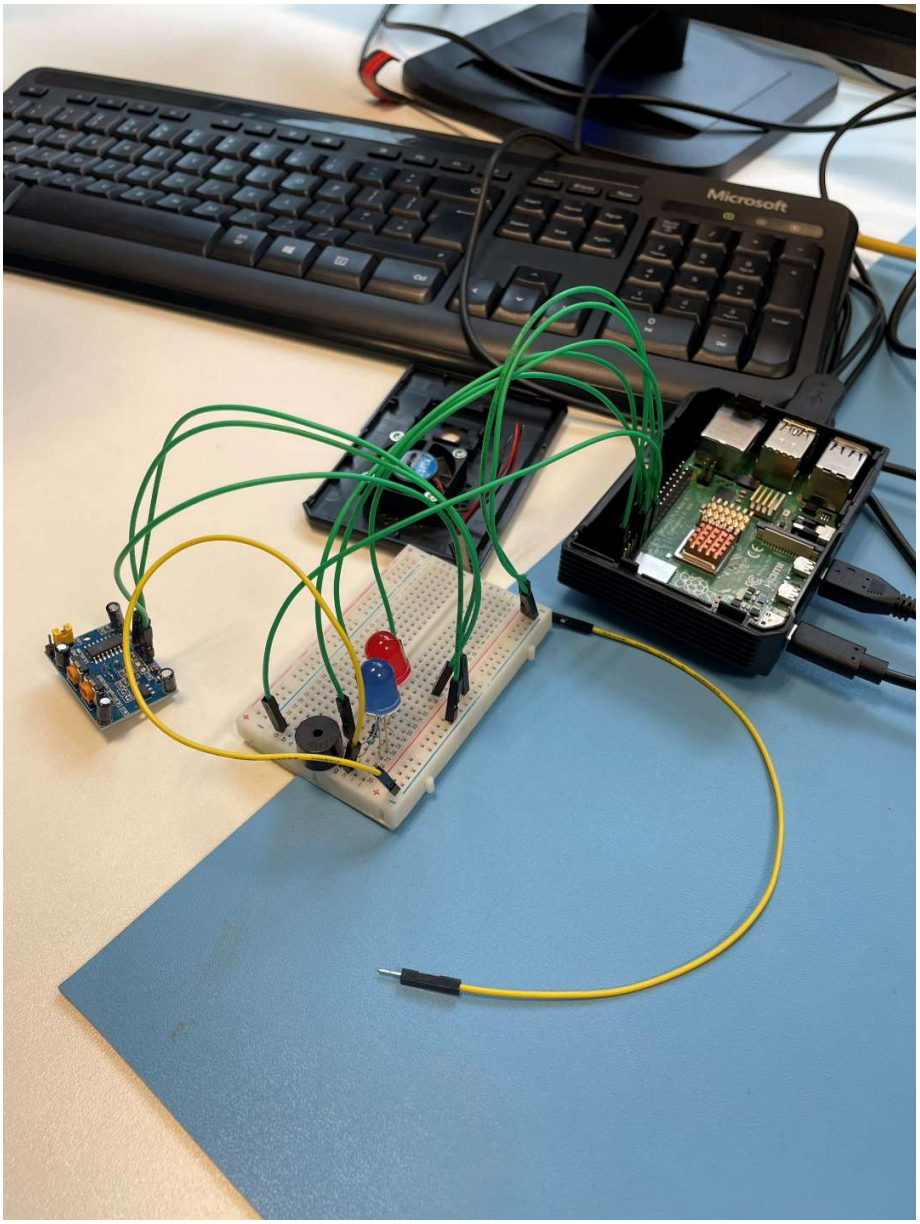
Microsoft

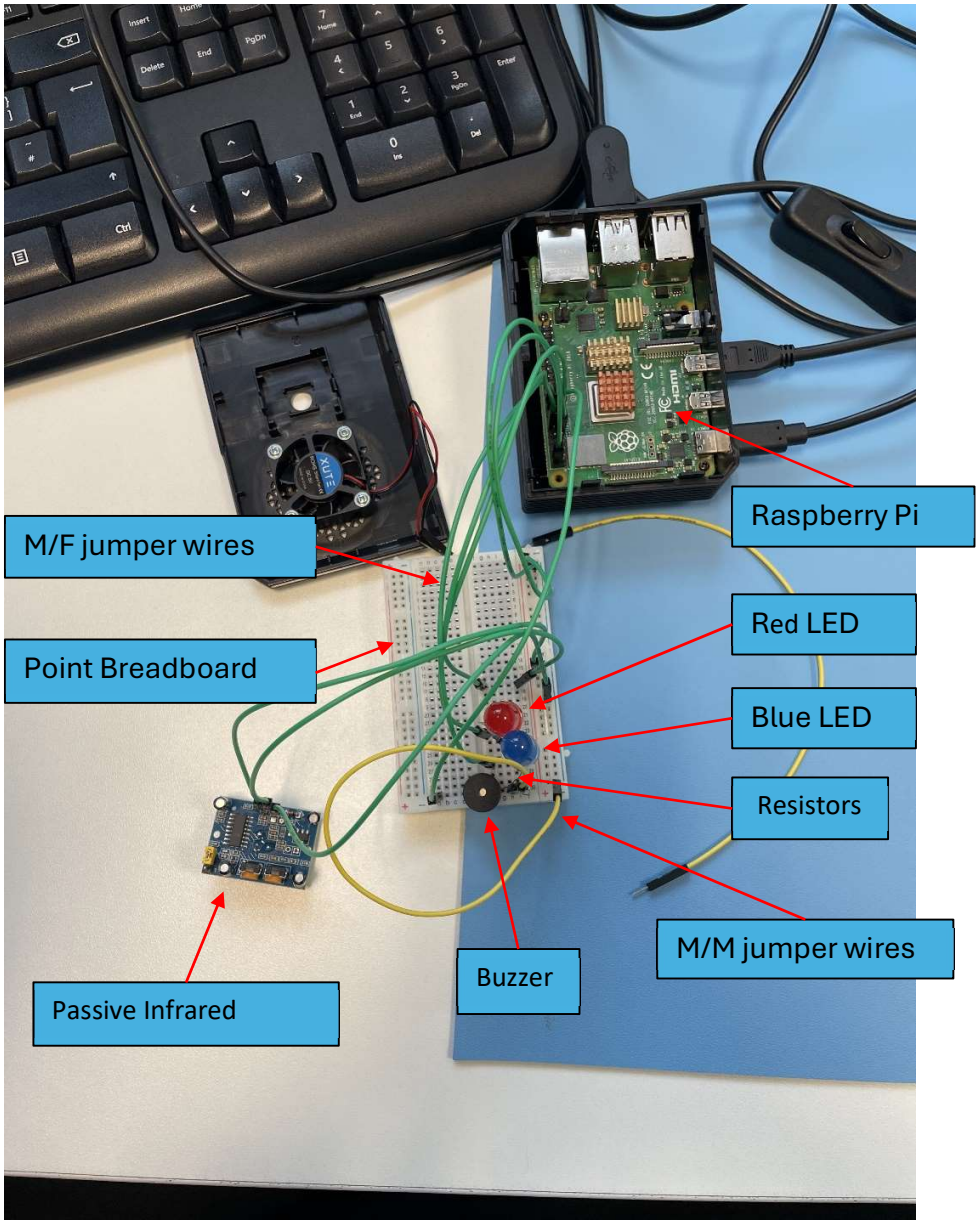
M/F jumper wires
Point Breadboard
Passive Infrared
Buzzer
Raspberry Pi
Red LED
Blue LED
Resistors
M/M jumper wires

Code

```python
# Set a variable to hold the GPIO Pin identity
pir = MotionSensor(17)
red = LED(18)
blue = LED(24)
buzzer = Buzzer(22)

# Twilio credentials
account_sid = os.getenv('TWILIO_ACCOUNT_SID')
auth_token = os.getenv('TWILIO_AUTH_TOKEN')
client = Client(account_sid, auth_token)

def send_sms_alert():
    message = client.messages.create(
        body="Motion has been detected by the PIR sensor. Please check the area for security purposes.",
        messaging_service_sid='MGXXXXXXXXXXXXXXXXXXXXXXXXXXXXXX',  # replace with your messaging service SID
        to='+447863557491'  # replace with the actual phone number, in international format
    )
    print(f"SMS sent: {message.sid}")

# Wait for PIR sensor to settle
print("Waiting for PIR to settle")
pir.wait_for_no_motion()
print("PIR Module Test (CTRL-C to exit)")

# Variables to hold the current and last states
currentstate = False
previousstate = False
```

```python
try:
    # Loop until user quits with CTRL-C
    while True:
        # Read PIR state
        currentstate = pir.motion_detected

        # If the PIR is triggered
        if currentstate and not previousstate:
            print("Motion detected!")
            # Send SMS alert
            send_sms_alert()

            # Flash lights and sound buzzer three times
            for _ in range(3):
                buzzer.on()
                red.on()
                time.sleep(0.2)
                red.off()
                blue.on()
                time.sleep(0.2)
                blue.off()
                buzzer.off()
                time.sleep(0.2)

            # Record previous state
            previousstate = True

        # If the PIR has returned to the ready state (no motion)
        elif not currentstate and previousstate:
            print("No Motion")
            previousstate = False

        # Wait for 10 milliseconds
        time.sleep(0.01)

except KeyboardInterrupt:
    print("Quit")
```

Test log

Test No	Test description	Evidence	Pass/fail

1	Booting up the Raspberry Pi		Pass
2	Writing the python script/saving the code in raspberry pi	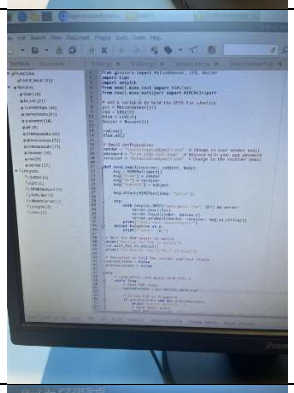	Pass
3	Running the code script on raspberry pi	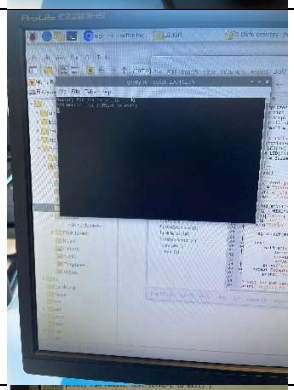	Pass
4	Printing “motion detected” and sending alert email when intruder is detected	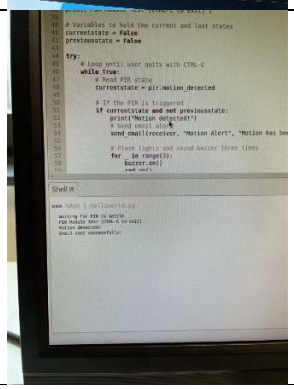	Pass

5	Receiving alert email when the PIR sensor detects motion	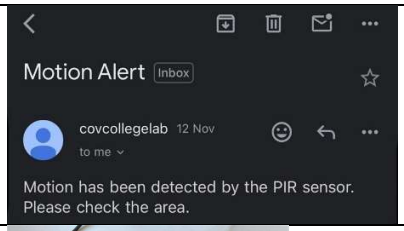	Pass
6	When motion is detected the LEDs lights (Red & Blue) will turn on	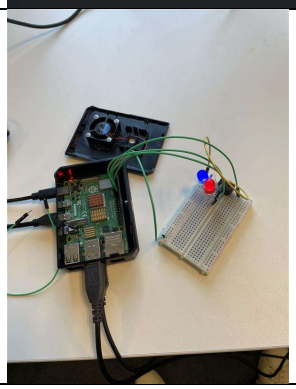	Pass

Reviewing to which extent the prototype meets client requirements.

After developing the prototype of the alarm system, we then must test to see to which extent it meets the client requirements. The initial client requirements were to design and develop alarm systems that detects and alert the owner via pre-set email or SMS to notify them to check the area from intruders.

In this prototype I have used a third-party API (Twilio) to send a text message when the motion detects intruder and send a warning message (Motion has been detected by the PIR sensor. Please check the area for security purpose).

```
# Twilio credentials
account_sid = os.getenv('TWILIO_ACCOUNT_SID')
auth_token = os.getenv('TWILIO_AUTH_TOKEN')
client = Client(account_sid, auth_token)

def send_sms_alert():
    message = client.messages.create(
        body="Motion has been detected by the PIR sensor. Please check the area for security purposes.",
        messaging_service_sid='MGXXXXXXXXXXXXXXXXXXXXXXXXXXXXXXXX',  # replace with your messaging service SID
        to='+447863557491'  # replace with the actual phone number, in international format
    )
    print(f"SMS sent: {message.sid}")
```

The problem with this feature is that it is a free plan which limits the user to only send 3 text messages every day. This is not great because when the system hits the limit it will no longer send any notifications to the owner. So, for security reasons this feature is not the best and the area can be exposed to multiple activities and three messages is not enough to ensure safety environment.

Justifying decisions made

After designing and reviewing the initial system, my colleagues suggested to add annotations detailing everything in the design such as, raspberry pi, buzzer, LEDs etc. To let others understand the concept of the system and how it operates from M2M. Additionally, adding infrared sensors to catch any suspicious activity and alert the owner via pre-set communication method has helped me to align with the client requirements.

Using raspberry pi in alarm system is better than other alternatives like, Arduino because it is affordable, versatile and ability to handle multiple tasks simultaneously. Unlike Arduino, which is better suited for simple-function tasks, the raspberry pi can integrate multiple components such as PIR sensors, cameras, and communications. For example, it can process sensors inputs, send real-time alerts via email or SMS, and even integrate with smart homes devices, all from single device. This makes raspberry pi more efficient solution for building alarm systems.

Using infrared sensors to detect motions its more efficient than other alternatives such as, pressure sensors, I have chosen infrared sensors to include it into my system because of the ability to detect motion and heat without requiring physical contact. Unlike pressure sensors which only activate when weight or force is applied to a specific area.

Additionally, infrared sensors are easy to install on walls or ceilings while pressure sensors require precise placement and are limited to fixed/localised spots. That is why infrared sensors are more reliable and suitable for dynamic environments where pressure sensors are better suited for specific confined spots.

Using third party API to send automatic messages to the owner, initially I have used Twilio to do that, but the problem is it limits me to only three messages per day. To fix that I have instead used Gmail API to send unlimited messages when the system detects intruders.

The choice to use email alerts means notifications can be easily accessed on smartphones or computers by homeowners and headquarters staff. Email is a straightforward and cost-effective option that does not require specialised apps, ensuring rapid, wide-reaching alerts. Additionally, email records provide a history of alerts for monitoring and reporting purposes.

Using python as programming language it allowed me to connect the point breadboard with the raspberry pi allowing them to exchange data efficiently with low power consuming.

Optimised prototype

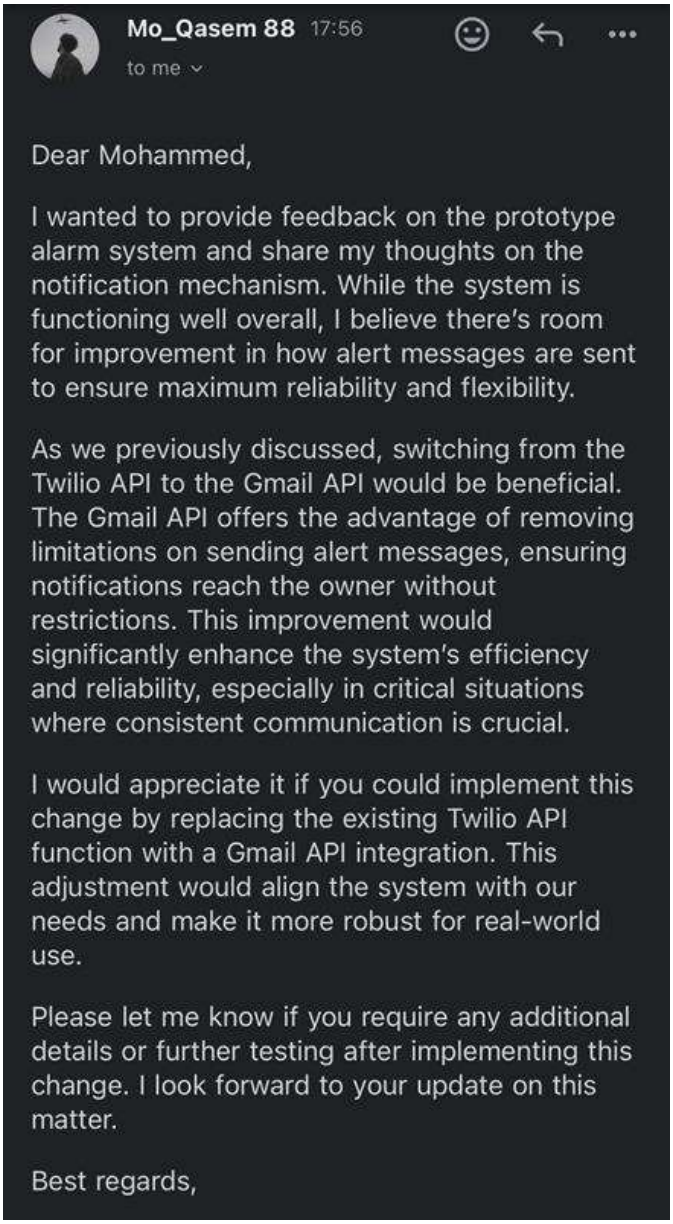

Mo_Qasem 88 17:56

to me

Dear Mohammed,

I wanted to provide feedback on the prototype alarm system and share my thoughts on the notification mechanism. While the system is functioning well overall, I believe there's room for improvement in how alert messages are sent to ensure maximum reliability and flexibility.

As we previously discussed, switching from the Twilio API to the Gmail API would be beneficial. The Gmail API offers the advantage of removing limitations on sending alert messages, ensuring notifications reach the owner without restrictions. This improvement would significantly enhance the system's efficiency and reliability, especially in critical situations where consistent communication is crucial.

I would appreciate it if you could implement this change by replacing the existing Twilio API function with a Gmail API integration. This adjustment would align the system with our needs and make it more robust for real-world use.

Please let me know if you require any additional details or further testing after implementing this change. I look forward to your update on this matter.

Best regards,

As we have mentioned earlier that switching from Twilio to Gmail API has more advantages because there is no limitation from sending alerting message to the owner. This change ensures greater flexibility and reliability in delivering notifications. To do this I have removed the previous API function and introduced a new function that contains the Gmail API. This transition allows the system to handle notifications more efficiently.

Below is the updated script that integrates the Gmail API, following by test evidence of receiving the email successfully.

```python
# Email configuration
sender = "covcollegelab@gmail.com"  # Change to your sender email
password = "irsn xidp xuoi kags"  # Replace with your app password
receiver = "moha122arab@gmail.com"  # Change to the receiver email

def send_email(receiver, subject, body):
    msg = MIMEMultipart()
    msg["From"] = sender
    msg["To"] = receiver
    msg["Subject"] = subject

    msg.attach(MIMEText(body, "plain"))

    try:
        with smtplib.SMTP("smtp.gmail.com", 587) as server:
            server.starttls()
            server.login(sender, password)
            server.sendmail(sender, receiver, msg.as_string())
        print("Email sent successfully!")
    except Exception as e:
        print(f"Error: {e}")
```

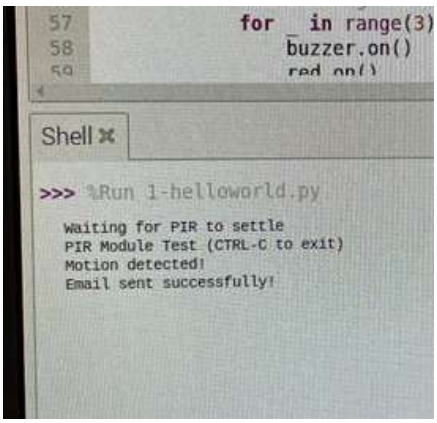

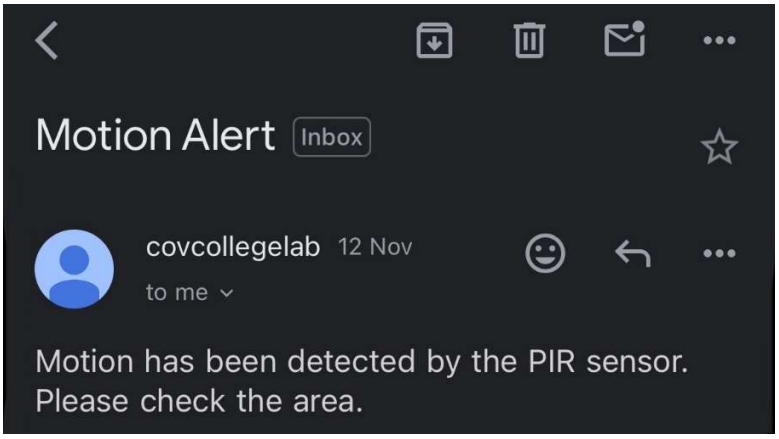

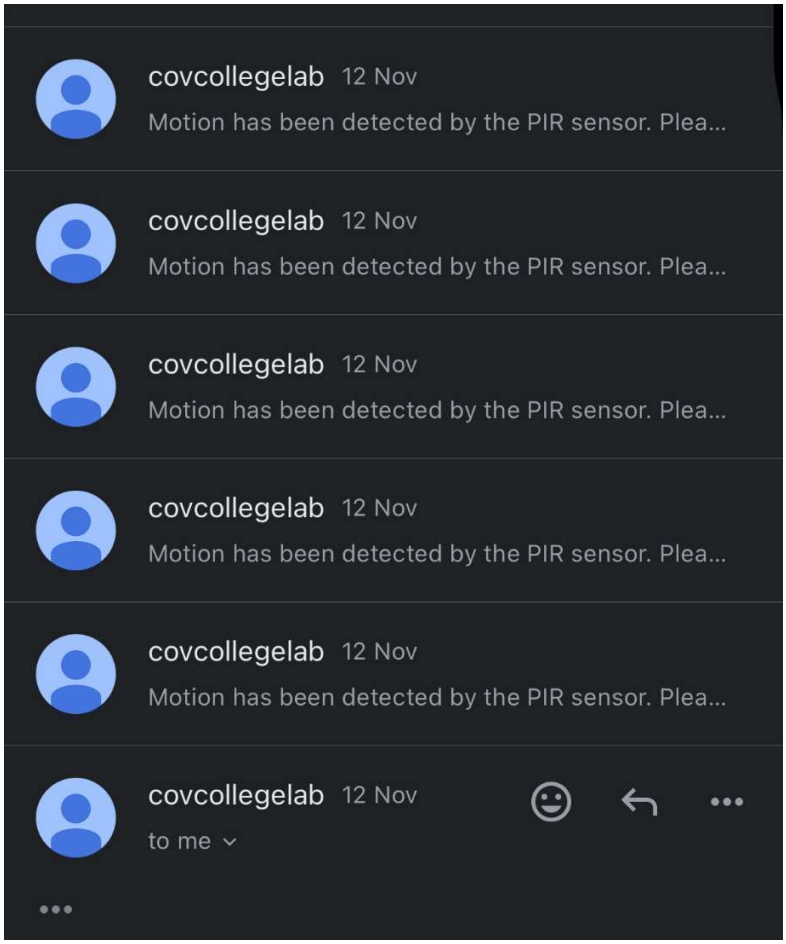

Evaluating the final system

To evaluate the final system, we must compare it against the client requirements. The client requested an alarm system that when the alarm rings it notifies the homeowner and the headquarters when intruder is detected.

The benefits of the system, I have designed M2M system and developed a prototype to implement and meet the client requirements. The initial development prototype was working efficiently except for the notification part. The initial API was limited to only 3 messages per day. To fix this problem I have used Gmail API that gives freedom and unlimited messages per day when the PIR detects motion/alarm rings and sends notifications to the owner.

Another good thing about the system is that it runs on low power consumption, which means it will only require low power to run for long term this can result in low bills of electricity for the user at the end of each month.

The downside of the system is that it can only detect movement within a short range near the motion detector. This means it is unable to identify intruders or activities happening at a longer distance. This limitation is due to the low mobility of the system, as it is fixed in one position and cannot adjust to cover a wider area. As a result, the PIR sensor is restricted to detecting motion only within its immediate surroundings.

Additionally, the security is big concern, since the system runs on radio waves and it is connected to a Wi-Fi network, there's vulnerability, hackers and unauthorised access can take it as advantage and misuse the system or turn it off.

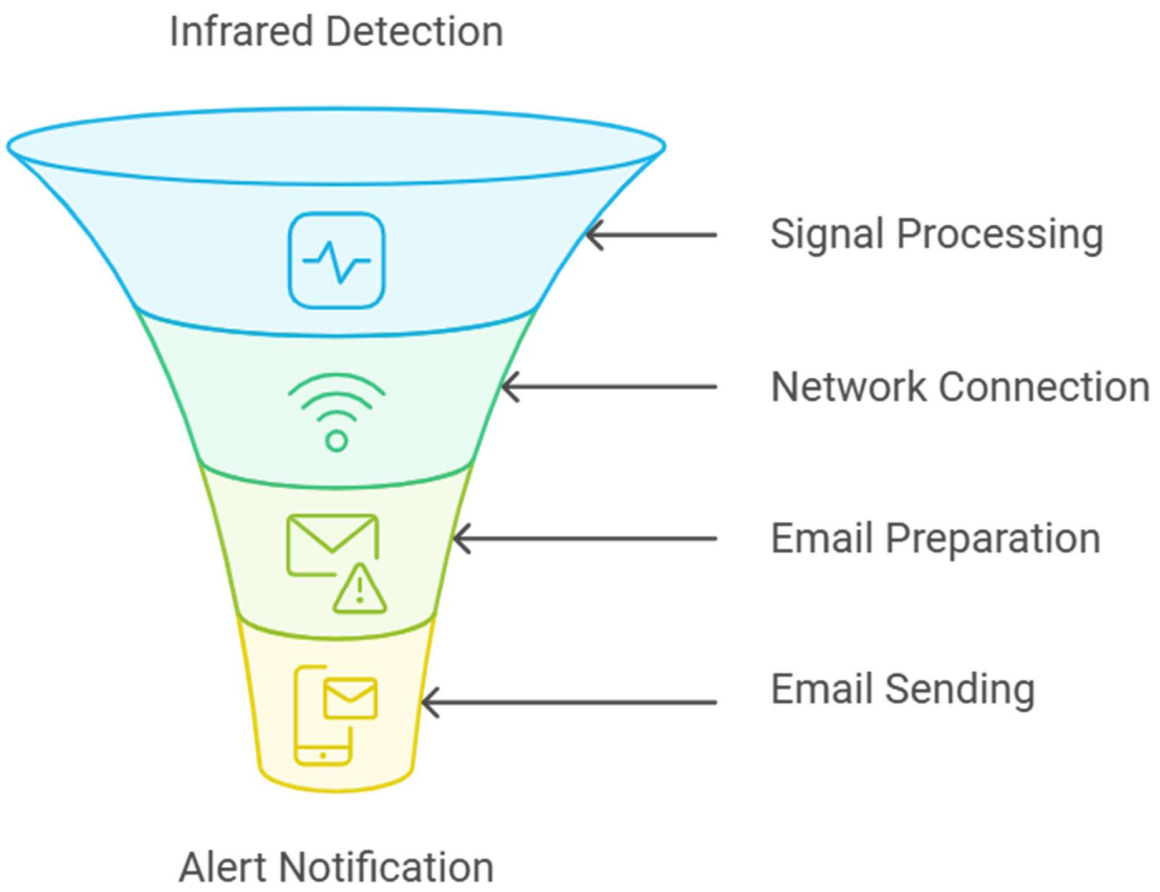

Legislations and regulations to consider.

For the user to be able to use this system legally and safely, it is recommended to let the user know some of the regulations on having alarm system.

1. **UK GDPR and data Protection Act 2018**

Ensure lawful data processing, data minimisation, security, and respect for user rights as personal data is being collected.

2. **Privacy and Electronic Communication Regulations**

Obtain consent for automated notifications especially for email alerts and secure communications.

3. **Surveillance Camera Code of Practice**

If using cameras, ensure they only record private property. Consider placing signs to inform others of recording.

4. **Computer Misuse Act 1990**

Protect the system against unauthorised access with robust security measures, such as encryption and strong passwords.

5. **Human Rights Act 1998**

Respect neighbour's privacy by avoiding unnecessary recording of public or adjacent areas.

Future improvements

After reviewing the final system with my colleagues they agreed that the final/optimised version of the alarm system aligns with the client requirements, for future improvements they suggested that the client needs to improve the security of the system such as, adding Firewall which will help monitor and control incoming and outgoing network traffic, blocking potential harmful connections, adding antivirus software is essential for detecting and removing malicious software, further protecting the system from threats like viruses, malware, and spyware. Additionally, enforcing the use of strong passwords will make it more difficult for unauthorised users to gain access. these measures create a multi-layered security approach that significantly reduces the risk of breaches and ensures sensitive information remains secure. Below is the review evidence:

1. By having unlimited API sender notification for security purpose is it more efficient than having only 3 messages per day?

4 Responses

ID ↑	Name	Responses
1	Mohammed Daanyal	Yes, having unlimited is more efficient
2	Ilmunde Mohammed	Yes, having unlimited is more efficient
3	Muhammad Ahmed	Yes, having unlimited is more efficient
4	Kwaku-Bonsu Nyamekye	Yes, having unlimited is more efficient

2. Why is infrared sensors is more accurate and covers wider range than pressure sensors for alarm system?

4 Responses

ID ↑	Name	Responses
1	Mohammed Daanyal	because pressure sensors are designed and placed in specific spot which reduces the detection accuracy and don't cover wider range
2	Ilmunde Mohammed	because it not designed for fixed spot
3	Muhammad Ahmed	Because they detect heat signatures and movement.
4	Kwaku-Bonsu Nyamekye	I'd assume the reason that infared sensors are much more accurate and covers a wider range than pressure sensors for alarms are due to the fact that infared sensors have immaculate radio waves which can be more reliable.

3. Do you think that the optimised version of the system is more efficient and aligns with the client requirements

4 Responses

ID ↑	Name	Responses
1	Mohammed Daanyal	Yes, it works perfectly
2	Ilmunde Mohammed	Yes
3	Muhammad Ahmed	Yes, it is.
4	Kwaku-Bonsu Nyamekye	Yes it does.

4. What future improvements needs to be consider in the final system to ensure more reliability and secure system?

4 Responses

ID ↑	Name	Responses
1	Mohammed Daanyal	by adding security measures like firewall will ensure more secure network connection when transmitting data
2	Ilmunde Mohammed	adding antiviruses and firewall
3	Muhammad Ahmed	Using a strong password.
4	Kwaku-Bonsu Nyamekye	For future improvements i'd recommend implementing antiviruses, firewalls and strong 12 character passwords.

Individual responsibility and time management

To finish this task and deliver it to the client, I have made Gantt chart to track each task progress to completion. I Started with defining the user requirements to have a vision on the final system how will be used/operate/look, then I designed initial design and I have sent it to my colleagues to review it and suggested any improvements, then I started with building a prototype, after the completion I have run tests and review to see to which extent it meets the client requirements, then moved to the justifying all the decision made during the project, built an optimised prototype to meet the client requirements, I evaluated the design, prototype and the optimised prototype, added legislation and regulations to consider when using the system with future improvements and lastly I made this Gantt chart to track and meet the project deadlines within the set period.

Below is the Gantt chart.

Task Title	16/10/24	17/10/24	18/10/24	14/11/24	15/11/24	16/11/24	17/11/24	18/11/24	20/11/24
Defining requirements									
Designing system									
Reviewing the design with others									
Developing prototype									
Reviewing prototype to which extent meets requirements									
Justifying decision made									
Optimising prototype									
Evaulating the final system									
Legislations and regulations									
Future improvements									
Individual responsibility and time management									

On progress
Completed
Not started yet

References

Explaining WiFi standards. (2024, November 20). Retrieved from NetSpot: https://www.netspotapp.com/blog/wifi-standards/?srsltid=AfmBOoqM6jgBfzX0dbaKb9fpKJSVWnflt7ltjlyG1STC1C8-ph66gCuS

Hub, R. (2024, November 14). *How to Make Burglar Alarm Using Raspberry Pi | Keep Thief's Away!* Retrieved from AutoDesk: https://www.instructables.com/How-to-Make-Burglar-Alarm-Using-Raspberry-Pi-Keep-/

Surrey Fire & Safety Ltd. (2024, November 14). *Alarm Regulations – a simple guide to UK legislation*. Retrieved from Surrey Fire & Safety Ltd: https://surreyfire.co.uk/fire-alarm-regulations/

TCP/IP protocols. (2024, November 20). Retrieved from IBM: https://www.ibm.com/docs/en/aix/7.2?topic=protocol-tcpip-protocols